EXHIBIT B

ACCESSIBLE PARKING AREAS:

WITHIN 48 HOURS OF PLACEMENT, ALL ACCESSIBLE PARKING AREAS AND ASSOCIATED SIDEWALKS AND RAMPS MUST BE SURVEYED BY A LICENSED SURVEYOR AND PROVIDED TO OWNER/ENGINEER. ANY NONCOMPLIANT AREAS SHALL BE REWORKED AND RESURVEYED UNTIL THEY ARE COMPLIANT WITH THE CONSTRUCTION PLAN.

BUILDING REFERENCE:

BUILDING OUTLINE BASED UPON PLANS PROVIDED BY RICHARD L. BOWEN & ASSOCIATES, WITH AN ISSUE DATE OF 07/10/2017

STRIPING NOTES:

1. TYPICAL PARKING SPACE SHALL BE STRIPED WITH A 6" WHITE STRIPE.
2. SEE DETAILS FOR HANDICAP PARKING.
3. STRIPING AND PAVEMENT MARKINGS SHALL CONFORM TO THE MANUAL OF UNIFORM TRAFFIC CONTROL DEVICES.

SIGN LEGEND

I.D.	TEXT OR SYMBOL	SIZE
R1-1	STOP	30"x30"
HC	HANDICAP PARKING (SEE DETAIL)	12"X18"

ALL SIGNS SHALL CONFORM TO THE MANUAL ON UNIFORM TRAFFIC CONTROL DEVICES.

PROPOSED CONSTRUCTION NOTES:

1. ALL CURB RADII TO BE 4 FEET AT FACE OF CURB, UNLESS OTHERWISE NOTED.
2. ALL DIMENSIONS FOR INTERNAL PARKING LOTS ARE MEASURED TO THE FACE OF CURB, UNLESS OTHERWISE NOTED.
3. CONCRETE SIDEWALK RAMPS SHALL BE CONSTRUCTED ACCORDING TO FDOT STANDARD PLANS INDEX 522-002 OR A.D.A. STANDARDS, WHICHEVER IS MORE RESTRICTIVE.
4. RETAINING WALLS SHALL BE CONSTRUCTED IN ACCORDANCE WITH FDOT STANDARD PLANS INDEX 400-011 (GRAVITY WALL) *OR* AN ALTERNATIVE DESIGN BY A LICENSED STRUCTURAL ENGINEER.

3

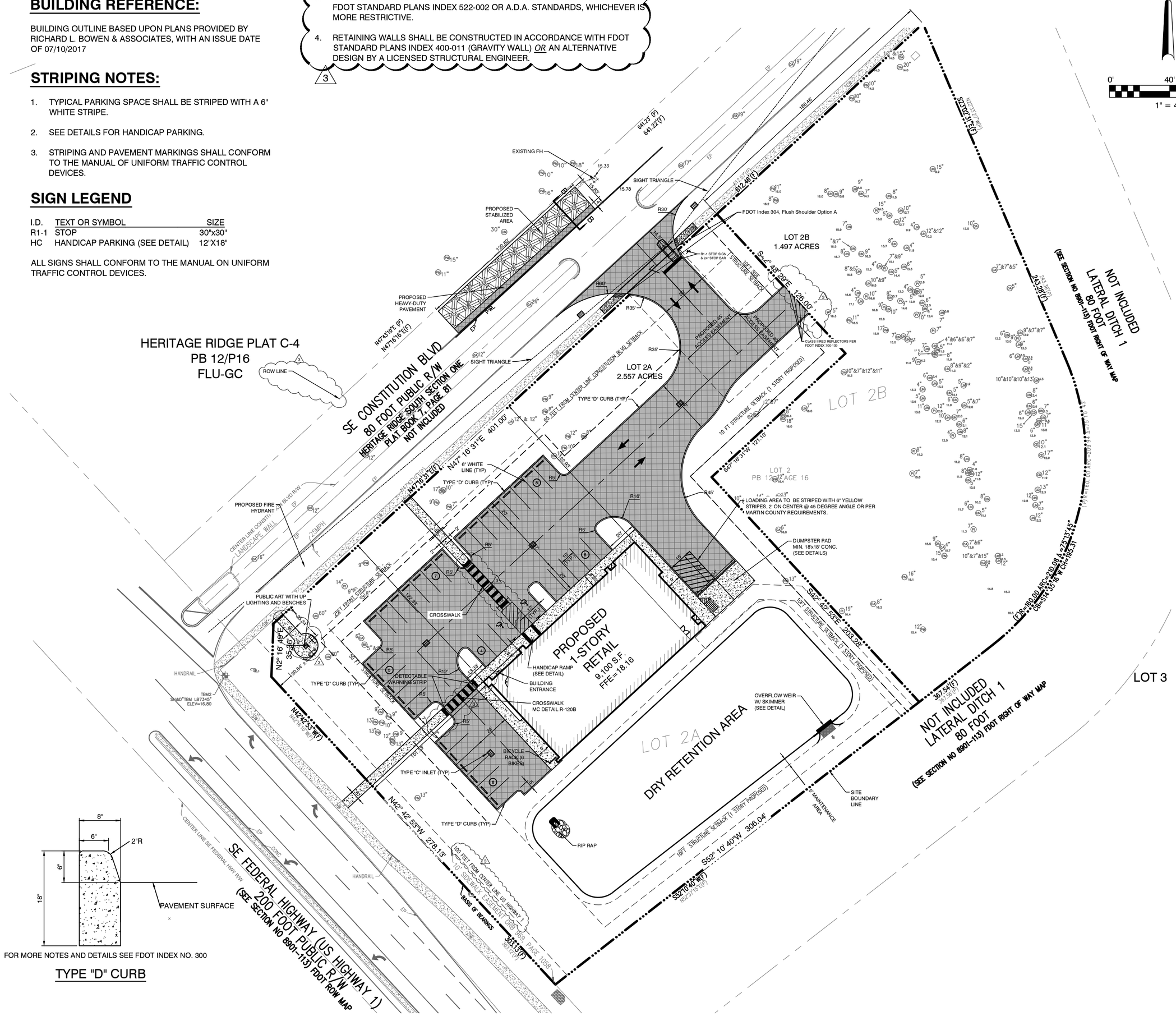

FOR MORE NOTES AND DETAILS SEE FDOT INDEX NO. 300

TYPE "D" CURB

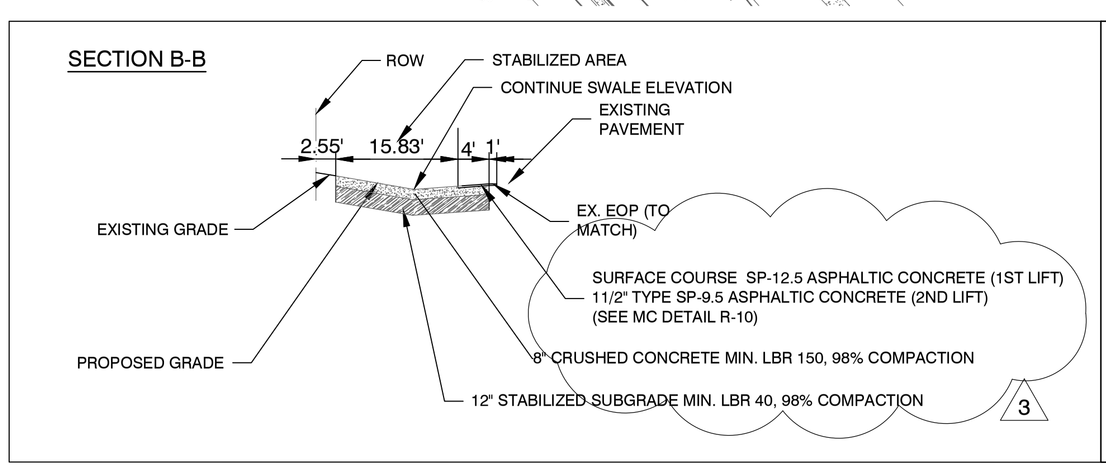

3

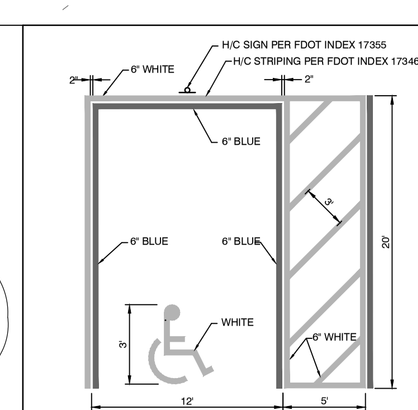

HANDICAP PARKING PAVEMENT MARKING

NTS

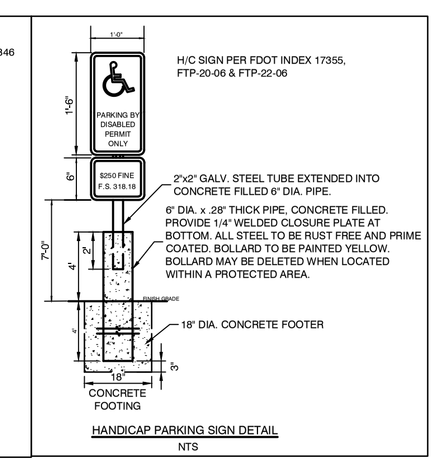

HANDICAP PARKING SIGN DETAIL

NTS

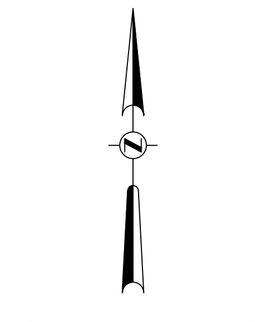

SITE LEGEND

	HANDICAP PARKING
	SITE BOUNDARY LINE
	CENTER LINE OF ROAD
	PROPOSED CURB (TYPE "D")
	EXISTING EDGE OF PAVEMENT
	PROPOSED CONCRETE PAVEMENT
	PROPOSED ASPHALT PAVEMENT
	PROPOSED STABILIZED AREA
	PROPOSED HEAVY DUTY PAVEMENT
TYP	TYPICAL
HC	HANDICAP
11	11 PARKING SPACES
S/W	SIDEWALK
R5'	5' RADIUS
LF	LINEAR FEET
SF	SQUARE FEET

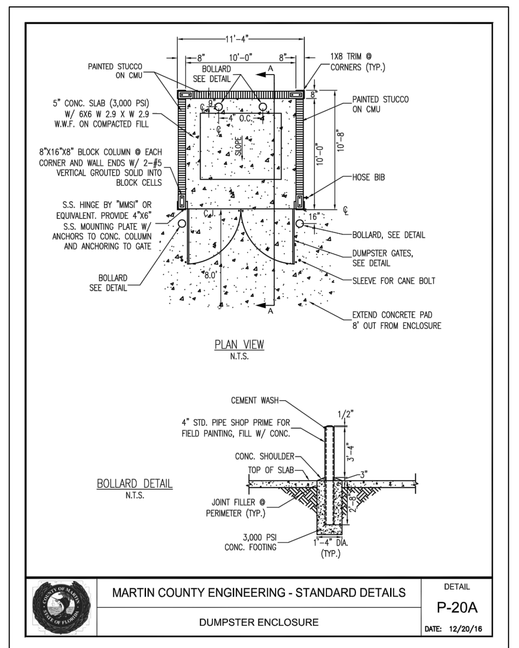

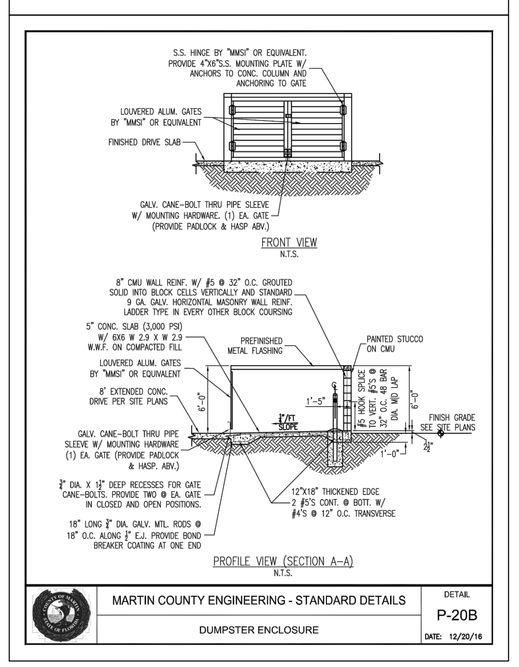

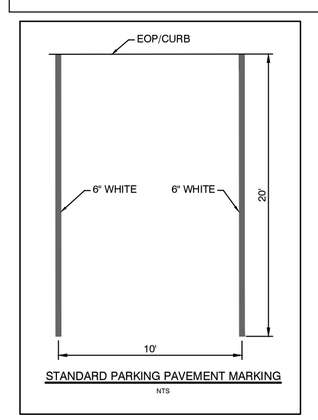

STANDARD PARKING PAVEMENT MARKING

NTS

SITE DATA

PROPERTY OWNER:
OLYMPUS DEVELOPMENT LLC
9336 EQUUS CIR
BOYNTON BEACH FL 33472

PROPERTY LOCATION:
SE CORNER OF SE CONSTITUTION BOULEVARD
& SE FEDERAL HIGHWAY HOBE SOUND , FLORIDA

PROPERTY PARCEL I.D. NUMBER:
34-38-42-001-000-00007

LEGAL DESCRIPTION:
LOT 2, PLAT OF C-4 AT HERITAGE RIDGE A P.U.D., ACCORDING TO THE PLAT THEREOF RECORDED IN PLAT BOOK 12, PAGE 16, OF THE PUBLIC RECORDS OF MARTIN COUNTY, FLORIDA.
LESS AND EXCEPT

LEGAL DESCRIPTION: RIGHT OF WAY DEDICATION

A PORTION OF LOT 2, PLAT OF C-4 AT HERITAGE RIDGE A P.U.D. ACCORDING THE PLAT THEREOF RECORDED IN PLAT BOOK 12, PAGE 16 OF THE PUBLIC RECORDS OF MARTIN COUNTY, FLORIDA AND AT THE SOUTHEAST CORNER OF THE INTERSECTION OF SOUTHEAST FEDERAL HIGHWAY AND SOUTHEAST CONSTITUTION BOULEVARD; THENCE NORTH 47°16'31" EAST ALONG THE NORTHEASTERN LINE OF SAID LOT 2 AND THE SOUTHEASTERN RIGHT OF WAY OF SAID SOUTHEAST CONSTITUTION BOULEVARD FOR 25.00 FEET; THENCE SOUTH 02°16'49" WEST FOR 35.36 FEET TO INTERSECT THE NORTH EASTERN RIGHT OF WAY OF SAID SOUTHEAST FEDERAL HIGHWAY AND THE WESTERN LINE OF SAID LOT 2; THENCE NORTH 42°42'53" WEST ALONG SAID LINE FOR 25.00 FEET TO THE POINT OF BEGINNING.

CONTAINING 313 SQUARE FEET OR 0.0072 ACRES, MORE OR LESS.

3

PROPERTY ZONING:
PUD-R

FUTURE LAND USE:
LOW DENSITY (UP TO 5 UPA)

LOT DATA - PROPOSED SUBDIVISION LOT 2

TOTAL AREA:
176,884 - 313 = 176,571 SF

MINIMUM REQUIREMENT
TOTAL LOT AREA = 10,000 SF
TOTAL LOT WIDTH = 80 FT (CONSTITUTION BLVD.)
TOTAL LOT WIDTH = 80 FT (FEDERAL HWY)

LOT 2A
TOTAL LOT AREA = 111,362 SF 3
TOTAL LOT WIDTH = 301 FT (CONSTITUTION BLVD.)
TOTAL LOT WIDTH = 278.13 FT (FEDERAL HWY)

LOT 2B
TOTAL LOT AREA = 65,209 SF
TOTAL LOT WIDTH = 186.46 FT (CONSTITUTION BLVD.)

LOT 2B - NOT PROPOSED FOR DEVELOPMENT
LOT 2A - PROPOSED FOR DEVELOPMENT

		LOT 2A		
PARCEL USE		PROPOSED - RETAIL		
	BUILDING AREA	0.21 acres	9,147 SF	8.21%
	VEHICULAR USE AREA	0.69 acres	30,041 SF	26.98%
	SIDEWALK/MISC CONC. AREA	0.09 acres	3,847 SF	3.45%
TOTAL IMPERVIOUS		0.99 acres	43,035 SF	38.64%
	LANDSCAPE AREAS	1.16 acres	50,365 SF	45.23%
	DRY RETENTION	0.41 acres	17,962 SF	16.13%
TOTAL PERVIOUS / OPEN SPACE		1.57 acres	68,327 SF	61.36%
TOTAL SITE/LOT AREA		2.56 acres	111,362 SF	100.00%

3

STRUCTURE SETBACK:
MINIMUM REQUIRED:
FRONT: 25'
SIDE: 10'
REAR: 20'
(MAINTAIN 100' FROM CENTERLINE OF SE FEDERAL HWY/ 65' FROM ℄ OF CONSTITUTION)

PROPOSED:
FRONT: 101.3'
SIDE: 67'
REAR: N/A

EXISTING USE: VACANT

PROPOSED USE: RETAIL
(GENERAL COMMERCIAL)

	ALLOWED	PROPOSED
MAX. BUILDING COVERAGE:	60%	8.21%
MAXIMUM BUILDING HEIGHT:	40'	23'
OPEN SPACE:	MIN. ALLOWED 20%	PROPOSED 61.36%

PARKING (REQUIRED):
1 PARKING SPACE PER 250 SF OF FLOOR AREA
9,100 SF/250 = 36 SPACES REQUIRED

HC SPACES REQUIRED: 2

STANDARD STALL SIZE = 10' x 20'
HC STALL SIZE = 12' x 20'

PARKING (PROPOSED):
STANDARD PARKING SPACES = 33
HC SPACES = 2
TOTAL PARKING SPACES = 35

FLOOD ZONE:
THE SUBJECT PROPERTY LIES WITHIN FLOOD ZONES AE, X SHADED AND X, PER FLOOD INSURANCE RATE MAP, COMMUNITY NUMBER 120161, PANEL NUMBER 310, SUFFIX G , MAP NUMBER 12085C0310G, MAP REVISED MARCH 16, 2015 (NAVD 88 DATUM)

NO.	DATE	DESCRIPTION	BY
11			
10			
9			
8			
7			
6			
5			
4		PER COUNTY COMMENTS	MJS
3	10/02/18	PER FDOT COMMENTS	TAM
2	07/13/18	PER FDOT COMMENTS	TAM
1	02/10/18	PER FDOT COMMENTS	TAM

REVISIONS

NOT VALID WITHOUT ORIGINAL SIGNATURE BY A REGISTERED PROFESSIONAL AVID GROUP® COA NUMBER 2345

PROJ. MANAGER: R. JOUDREY
PROJ. # 649005
DATE: 07/12/18

ZAREMBA GROUP, LLC
CIVIL ENGINEERING
LAND PLANNING
TRANSPORTATION
TRAFFIC/TRANSPORTATION
SURVEYING
GIS
2300 CURLEW ROAD STE 201
PALM HARBOR, FLORIDA
34683
PHONE (727) 789-9500
FAX (727) 784-6682
AVIDGROUP.COM
AVID GROUP®

HOBE SOUND BTS RETAIL

MARTIN COUNTY, FLORIDA

FINAL SITE PLAN

SHEET NO 1 OF 1

THESE PLANS MAY NOT BE COPIED AND/ OR MODIFIED WITHOUT WRITTEN PERMISSION FROM AVID GROUP® COPYRIGHT 2013

K:\PROJECTS\649005\HOBE\DWG\CORE\NTC\VIL\649005-FINAL SITE PLAN.DWG, 10/17/2018 3:33:22 PM, Jorge Hernandez