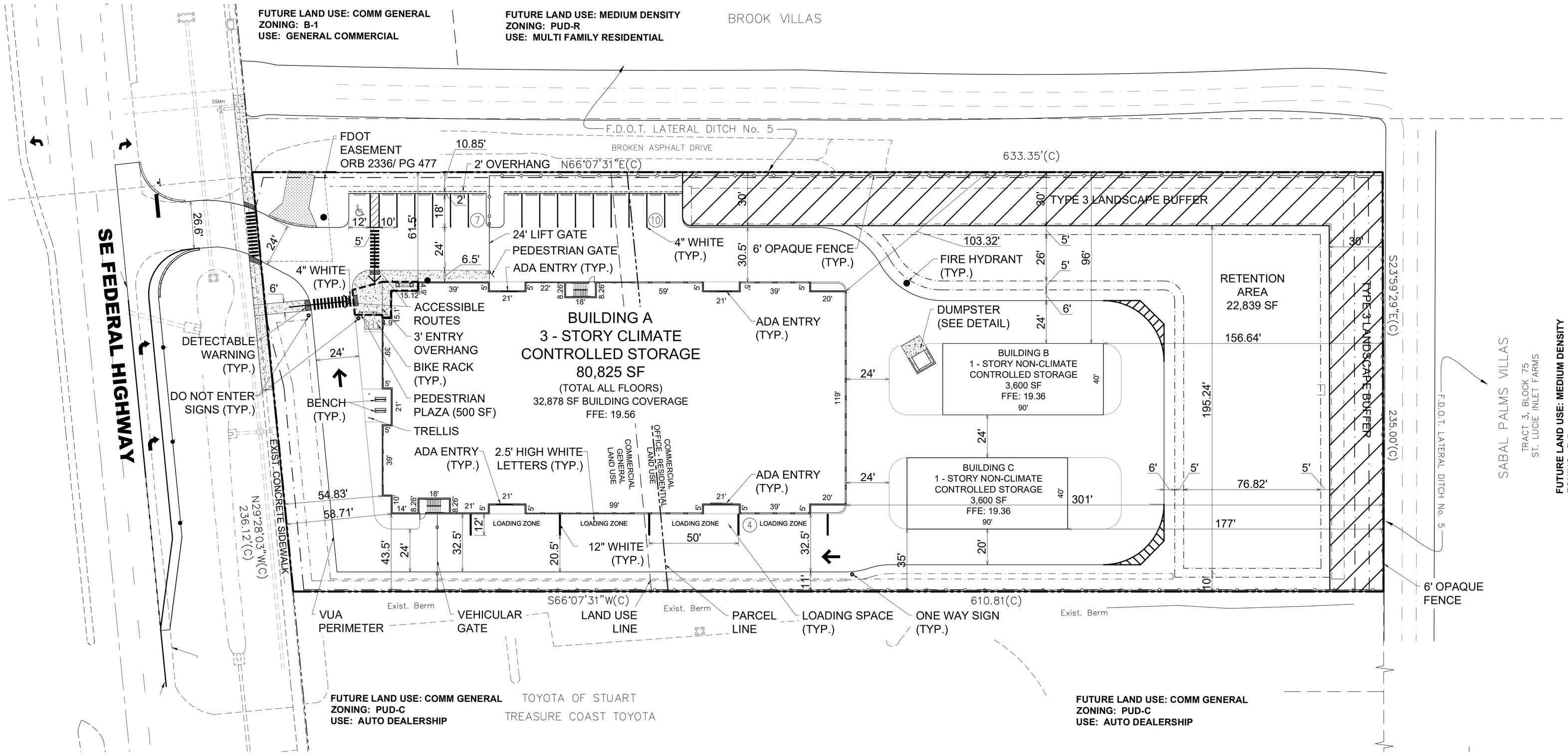

lucido & associates

701 SE Ocean Blvd., Stuart, Florida 34994 (772) 220-2100, Fax (772) 223-0220
100 Avenue A Suite 2A, Fort Pierce, Florida 34950 (772) 467-1301, Fax (772) 467-1303
827 North Thornton Avenue, Orlando, Florida 32803 (407) 898-9521, Fax (407) 898-9768

Key / Location:

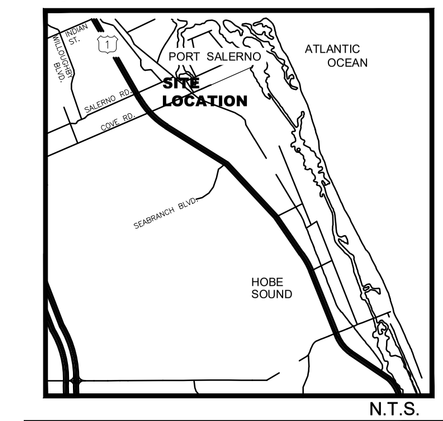

Project Team:

Client & Property Owner:	Baldwin Howell Properties, LLC 2 N. Tamiami Trail, Suite 104 Sarasota, FL 34236
Surveyor:	Tephillips, LLC 102 SW Parish Terrace Port St. Lucie, FL 34984
Civil Engineer:	Patrick LaConte, PE, CFM LaConte Engineering 3933 SE Fairway East Stuart, FL 34997
Traffic Engineer:	Patrick LaConte, PE, CFM LaConte Engineering 3933 SE Fairway East Stuart, FL 34997
Land Planner/ Landscape Architect:	Lucido & Associates 701 SE Ocean Boulevard Stuart, FL 34994

FUTURE LAND USE: MEDIUM DENSITY
ZONING: R-5
USE: MULTI FAMILY RESIDENTIAL

EXHIBIT B

BH Storage Stuart

Martin County, Florida

Revised
Final Site Plan

Date	By	Description
10.26.17	J.J.	Initial Submittal
5.30.18	J.J.	First Resubmittal
8.13.18	J.J.	Second Resubmittal
10.23.18		Update height per LPA

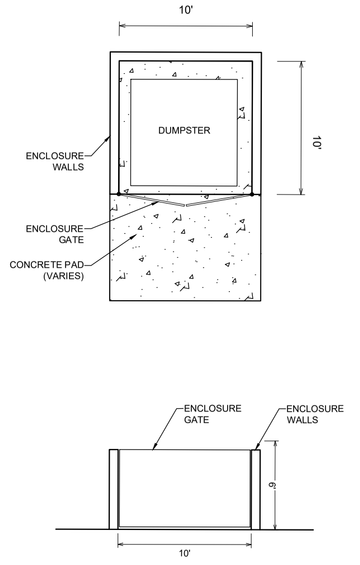

Dumpster Enclosure Detail

Not to Scale

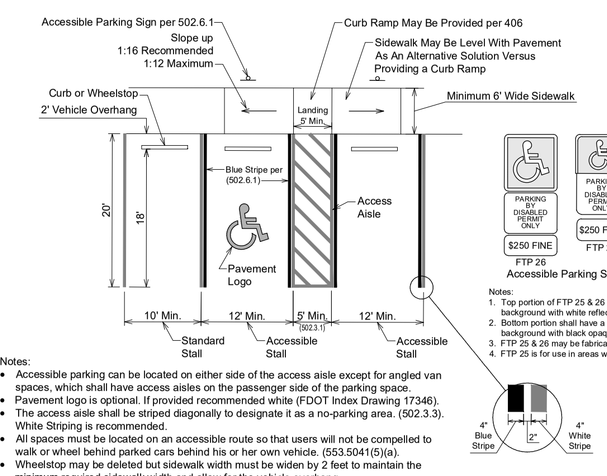

Notes:

- Accessible parking can be located on either side of the access aisle except for angled van spaces, which shall have access aisles on the passenger side of the parking space.
- Pavement logo is optional. If provided recommended white (FDOT Index Drawing 17346).
- The access aisle shall be striped diagonally to designate it as a no-parking area. (502.3.3). White Striping is recommended.
- All spaces must be located on an accessible route so that users will not be compelled to walk or wheel behind parked cars behind his or her own vehicle. (553.5041(5)(a).
- Wheelstop may be deleted but sidewalk width must be widen by 2 feet to maintain the minimum required sidewalk width and allow for the vehicle overhang.

Standard & Accessible Parking Space Detail

Not to Scale

Legend

PROPERTY LINE	4" PARKING STRIPE	EXIST. ROADWAY	TYPE 3 LANDSCAPE BUFFER
PAVEMENT	12" PARKING STRIPE	EXIST. ROADWAY CENTERLINE	DUMPSTER
BUILDING	PARKING OVERHANG	FDOT DRIVEWAY (ACCESS)	EXISTING RIGHT OF WAY
SITE FURNITURE	WHEELSTOP	FDOT EASEMENT	EXISTING SWALE
CURB	SIDEWALK	PATIO LIMITS	PARCEL LINE
TURN LANE CURB	EXIST. CONCRETE	TRELLIS	LAND USE LINE
RETENTION	EXIST. WATER EDGE	BIKE RACK	
FENCE	EXIST. PAVEMENT	PERIMETER BERM	

Legal Description

Parcel A

That part of the South 235 feet of the North 265 feet of Tract 4, Block 75, ST. LUCIE INLET FARMS, according to the plat thereof filed January 4, 1911 as recorded in Plat Book 1, page 98, of the Public Records of Palm Beach (now Martin) County, Florida, lying immediately Easterly of, adjacent to and parallel with the Easterly right of way line of U.S. Highway No.1 (State Road No.5), and extending Easterly to a depth of 200 feet, measured on a line parallel to the North line of Tract 4, Block 75, St. Lucie Inlet Farms, according to the plat thereof filed in Plat Book 1, page 98, Palm Beach (now Martin) County, Florida Public Records, from said Easterly right of way line of U.S. Highway No.1 (State Road No.5).

Parcel B

The South 235 feet of the North 265 feet of Tract 4, Block 75, ST. LUCIE INLET FARMS, according to the plat thereof filed January 4, 1911 as recorded in Plat Book 1, page 98, of the Public Records of Palm Beach (now Martin) County, Florida, less that portion lying immediately Easterly of, adjacent to and parallel with the Easterly right of way line of U.S. Highway No.1 (State Road No.5), and extending Easterly to a depth of 200 feet, measured on a line parallel to the North line of Tract 4, Block 75, St. lucie Inlet Farms, according to the plat thereof filed in Plat Book 1, page 98, Palm Beach (now Martin) County, Florida Public Records, from said Easterly right of way line of U.S. Highway No.1 (State Road No.5).

ALL CONTAINING 3.36 ACRES MORE OR LESS.

Parcel Control Number

55-38-41-000-075-00041-1
55-38-41-000-075-00042-0

Building Coverage

Commercial General (GC) Area:	47,200 sf
Max. Building Coverage (60%):	28,320 sf
Proposed Building Coverage (38%):	17,718 sf
Commercial Office - Residential (COR) Area:	98,989 sf
Max. Building Coverage (40%):	39,596 sf
Proposed Building Coverage (23%):	22,360 sf
Total Building Coverage Proposed (27%):	40,078 sf

General Notes

- During construction activities, existing native vegetation shall be retained to act as buffers between adjacent land uses, and to minimize nuisance dust and noise. Barricades shall be used on site to preserve the vegetation to be retained.
- All prohibited exotic plant species shall be removed and all required landscaping shall be installed prior to the issuance of a Certificate of Occupancy.
- All building, parking and access areas shall document compliance with the requirements of the American Disabilities Act prior to the issuance of a building permit.
- All signs shall be in accordance with Martin County applicable codes and ordinances in effect at the time of permit application.
- The maximum height of light poles in the parking lot shall be 30 feet. light poles within non vehicular pedestrian areas shall be 20 feet.
- Proposed light poles shall be shielded to minimize excess glare to adjacent residential areas and roadways.
- Refer to Landscape Plan for landscape details and specifications.
- All downspouts and roof drains shall not discharge across any pedestrian plaza or walkway.

Residential Storage Prohibitions

Applicable to Commercial Office Residential Land Use Only

- Section 3.94A: A residential storage facility shall not be used for any commercial or industrial warehousing, or as a basis for any manufacturing or retail sales or service activity.
- Section 3.94C: Storage of explosives shall be prohibited.
- Policy 4.13A.(1)(a): Building shall be restricted to structures with small modules adaptive exclusively to storage of personal items of residential clients. Commercial tenants shall be expressly prohibited.

Open Space Requirements

Commercial General (GC) Area:	47,200 sf
Required Open Space (20%):	9,440 sf
Provided Open Space (24%):	11,348 sf
Commercial Office - Residential (COR) Area:	98,989 sf
Required Open Space (40%):	39,596 sf
Provided Open Space (51%):	50,869 sf
Total Open Space Provided:	62,217 sf

Site Data:

Total Site Area:	146,189 sf.	(3.36 Ac.)	(100%)
Site Development Area:	146,189 sf.	(3.36 Ac.)	
Impervious Area:	83,972 sf.	(1.93 Ac.)	(57%)
Buildings:	40,078 sf.	(.92 Ac.)	
Vehicular Use Area:	42,408 sf.	(.97 Ac.)	
Sidewalk & Pedestrian Access Areas:	1,486 sf.	(0.03 Ac.)	
Pervious Area:	62,217 sf.	(1.43 Ac.)	(43%)
Retention Area:	22,839 sf.	(0.52 Ac.)	
Landscape Area:	39,378 sf.	(0.90 Ac.)	
Existing Use:	Commercial General & Single Family Residential		
Proposed Use:	Residential Storage Facility		
Existing Zoning:	GC and R-3A		
Future Land Use Designation:	Comm. General and COR		

Building Data

Gross Floor Area:	88,025 sf.
Proposed Maximum Height (Commercial General):	40'
Proposed Maximum Height (COR Land Use):	29'-4"
Stories:	Building A: (3) Stories Buildings B & C: (1) Story
Building Coverage:	40,078 sf, 27%
Open Space (Including Retention Area):	62,217 sf, 43%

Parking Requirements

Storage Facility:	88,025 sf @ 1 space per 1,500 sf
Parking Required:	54 Spaces
Parking Provided:	17 Spaces* Includes 1 ADA Space
Loading Spaces Required:	4 Spaces
Loading Spaces Provided:	4 Spaces

* Per parking rate adjustment

NORTH

SCALE: 1" = 30'

0 15' 30' 60'

REG. # 1018
Thomas P. Lucido

Designer	JJ	Sheet
Manager	DF	**SP-1**
Project Number	17-425	
Municipal Number	---	
Computer File	17-425 BH Storage Stuart - Site Plan.dwg	

© Copyright Lucido & Associates. These documents and their contents are the property of Lucido & Associates. Any reproductions, revisions, modifications or use of these documents without the express written consent of Lucido & Associates is prohibited by law.

Drawing Name: J:\Projects Active\17-425 5051 SE Federal Highway,Baldwin\Site Plan\ Oct 23, 2018 – 1:34pm 17-425 BH Storage Stuart – Site Plan.dwg