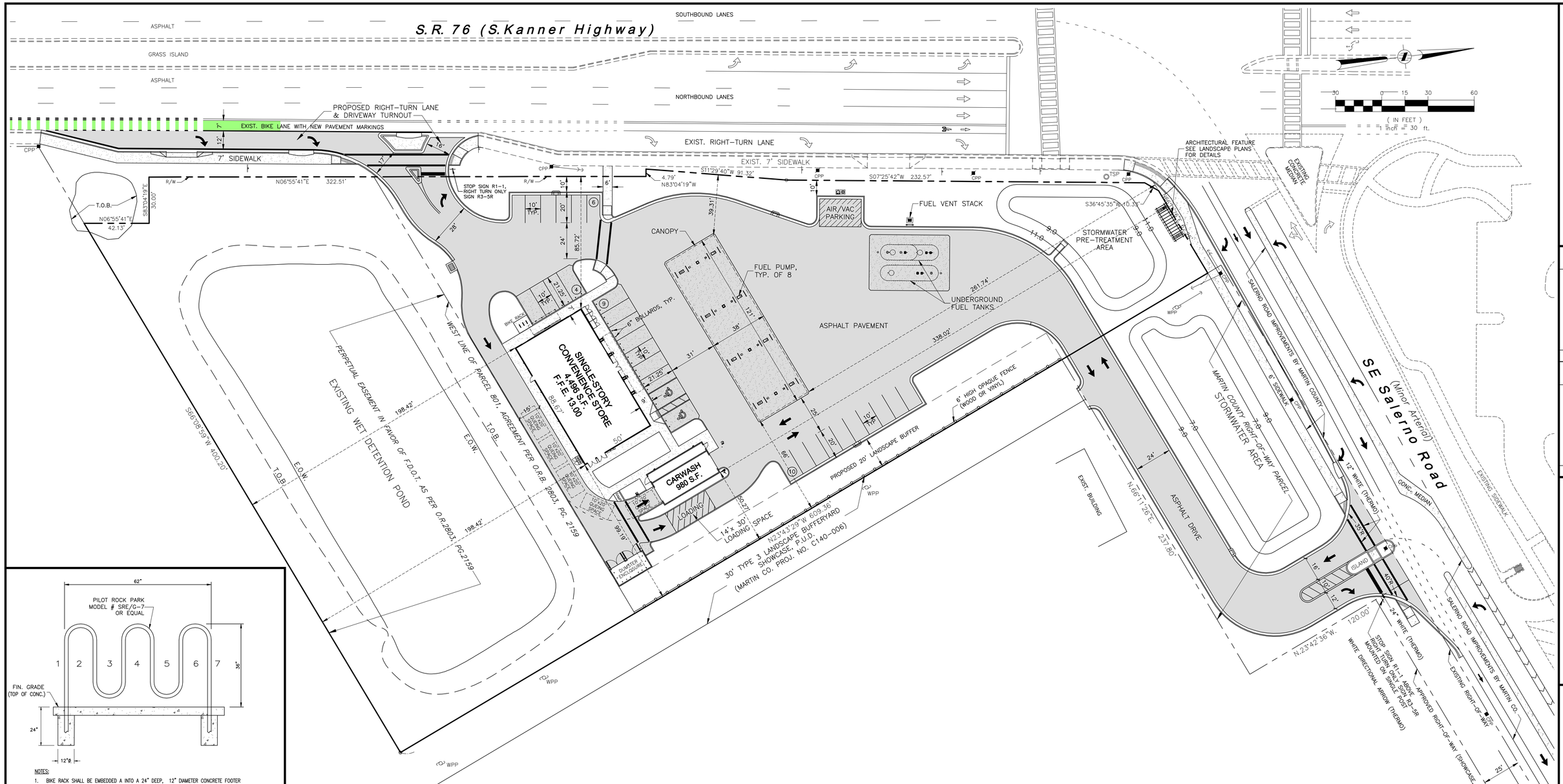

NOTES:
1. BIKE RACK SHALL BE EMBEDDED A INTO A 24" DEEP, 12" DIAMETER CONCRETE FOOTER

BICYCLE RACK DETAIL | 2

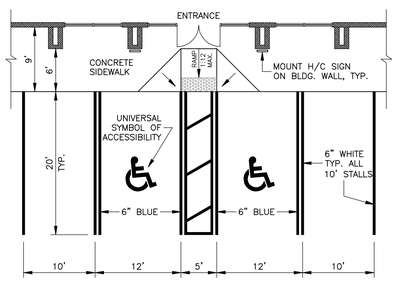

NOTE:
HANDICAP SIGNAGE, STALL & AISLE MARKINGS SHALL BE IN ACCORDANCE WITH FDOT DESIGN STANDARDS INDEX No. 711-001.

ACCESSIBLE ROUTES SHALL COMPLY WITH CURRENT FLA. ACCESSIBILITY CODE, CHAPTER 4.

ACCESSIBLE PARKING DETAIL | 1

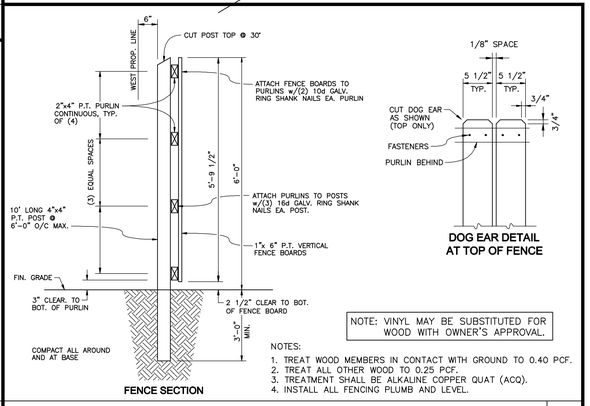

NOTE: VINYL MAY BE SUBSTITUTED FOR WOOD WITH OWNER'S APPROVAL.

NOTES:
1. TREAT WOOD MEMBERS IN CONTACT WITH GROUND TO 0.40 PCF.
2. TREAT ALL OTHER WOOD TO 0.25 PCF.
3. TREATMENT SHALL BE ALKALINE COPPER QUAT (ACQ).
4. INSTALL ALL FENCING PLUMB AND LEVEL.

OPAQUE FENCE DETAIL | 3

SITE DATA

Total Site Area	152,694 s.f.	3.51 ac.	100 %
Less F.D.O.T. Easement	66,180 s.f.	1.52 ac.	100 %
Net Development Area:	86,567 s.f.	1.99 ac.	100 %
Zoning	General Commercial		
Future Land Use	Commercial General		
PCN	55-38-41-000-044-00030-0		
Existing Use	Vacant		
Proposed Use	Convenience Store with Fuel Service		

OPEN SPACE

Dry Detention:	4,233 s.f.	0.10 ac.	4.9 %
Landscape Area	23,070 s.f.	0.53 ac.	26.7 %
Total	27,303 s.f.	0.63 ac.	31.6 %

IMPERVIOUS AREA

Building Coverage:	5,476 s.f.	0.13 ac.	6.3 %
Vehicular Pavement:	50,493 s.f.	1.16 ac.	58.4 %
Pedestrian Walks:	3,242 s.f.	0.07 ac.	3.7 %
Total	59,211 s.f.	1.36 ac.	68.4 %

BUILDING DATA

Proposed Height	26' (30 ' MAX.)
Number of Stories	1
Gross Floor Area	4,496 s.f.

BUILDING SETBACKS

	Required	Provided
Front	25'	39.31'
Side	10'	198.42'
Rear	20'	50.27'

PARKING

Convenience Store	4,496 s.f.
Parking Required (1 Sp./ 200 s.f.) = 23	
Parking Proposed	= 29 (Including 2 Accessible Spaces)

© CALVERT MONTGOMERY & ASSOCIATES, INC.
Engineers-Surveyors (LB & C.A. 0000160)
P.O. BOX 92...959 S. FEDERAL HWY.....STUART, FLORIDA 34995
TEL. (772) 287-3636 FAX (772) 220-0580

NO.	REVISION	DATE
1	REV. PER MARTIN CO. COMMENTS	05.02.21

DESIGNED BY: DATE: 11.16.20
DRAWN BY: SCALE: 1"=30'

FINAL SITE PLAN

SITE DEVELOPMENT PLANS FOR
WRIGHT FISH 7 ELEVEN
6755 S. KANNER HIGHWAY, STUART, FLORIDA

ENGINEER'S SEAL:
SCOTT T. MONTGOMERY, P.E.
FL. REG. No. 45954

PROJECT NO.

SHEET 1 OF 1